3. Intake Manifold

A: REMOVAL

1) Release the fuel pressure. <Ref. to FU(H4SO)-43, RELEASING OF FUEL PRESSURE, PROCEDURE, Fuel.>
2) Disconnect the ground cable from the battery.

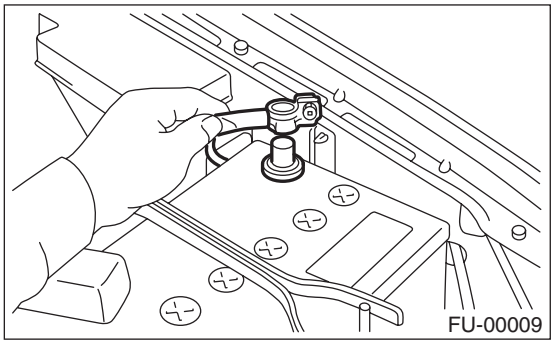

3) Open the fuel filler flap lid, and remove the fuel filler cap.
4) Remove the air intake duct, air cleaner case and air intake chamber. <Ref. to IN(H4SO)-7, REMOVAL, Air Intake Duct.> <Ref. to IN(H4SO)-5, REMOVAL, Air Cleaner Case.> <Ref. to IN(H4SO)-6, REMOVAL, Air Intake Chamber.>
5) Remove the generator. <Ref. to SC(H4SO)-14, REMOVAL, Generator.>
6) Remove the power steering pump and power steering reservoir tank from the bracket.
   (1) Remove the bolts which hold the power steering pipes onto the fuel pipe protector RH.

NOTE:
Do not disconnect the power steering hose.

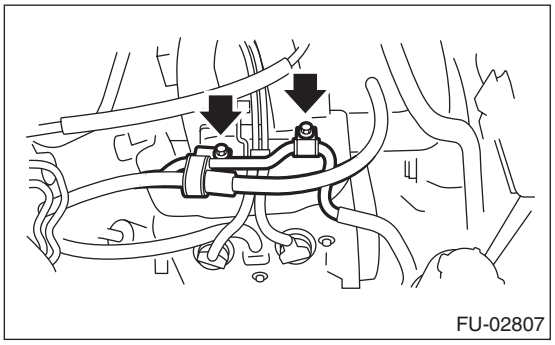

(2) Remove the installation bolt installing the power steering pump bracket.

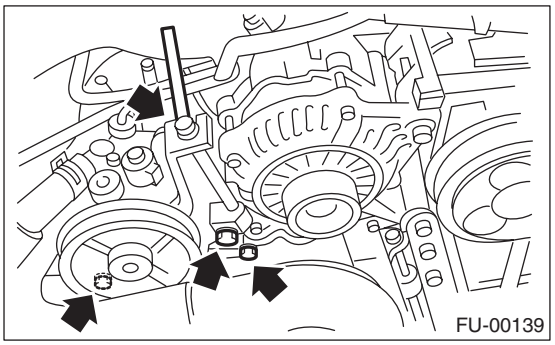

(3) Disconnect the connector (A) from the power steering pump switch.

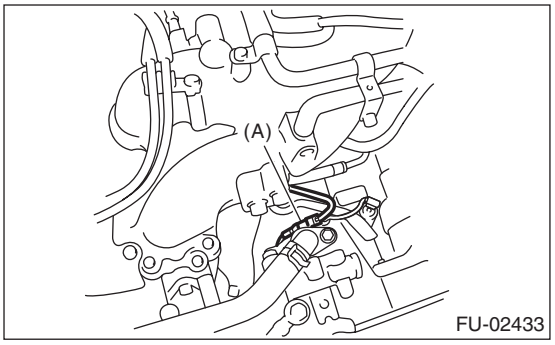

(4) Remove the reservoir tank from the bracket by pulling it upward.

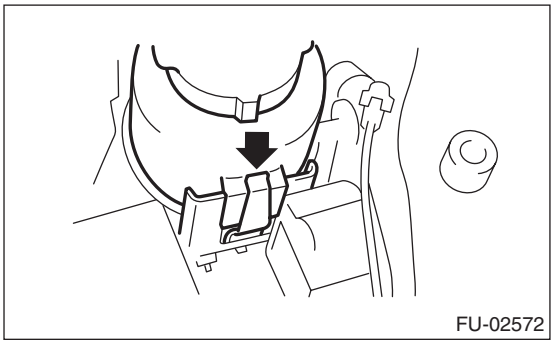

(5) Place the power steering pump on the right side wheel apron.

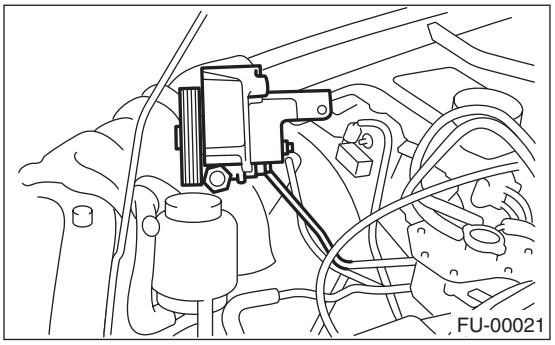

7) Remove the spark plug cords from the spark plugs by pulling the plug caps. (Do not pull the cord.)

8) Disconnect the engine coolant hoses (A) from throttle body.

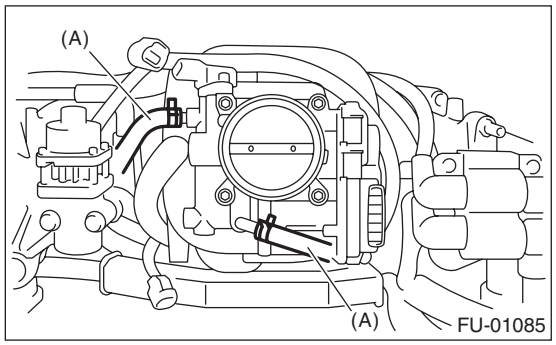

9) Disconnect the brake booster hose (A).

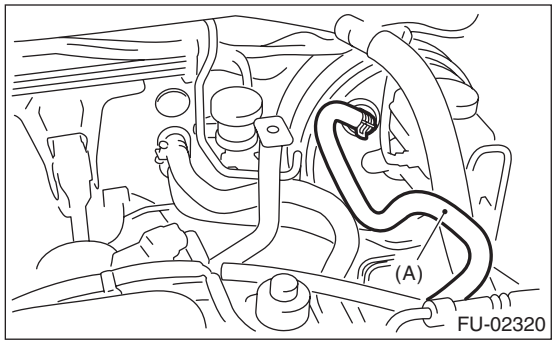

10) Disconnect the PCV hose (A) from intake manifold.

11) Disconnect the engine harness connectors (B) from bulkhead harness connectors.

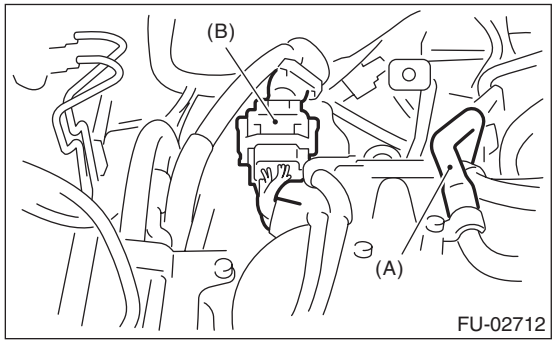

12) Disconnect the connectors from the engine coolant temperature sensor.

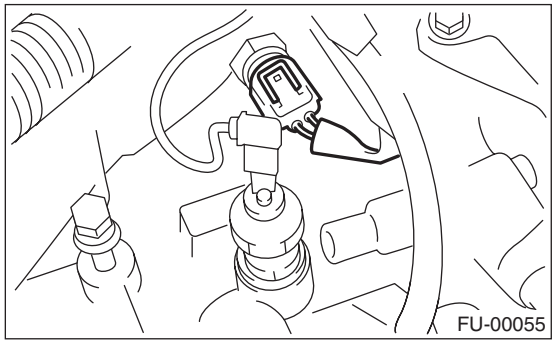

13) Disconnect the knock sensor connector.

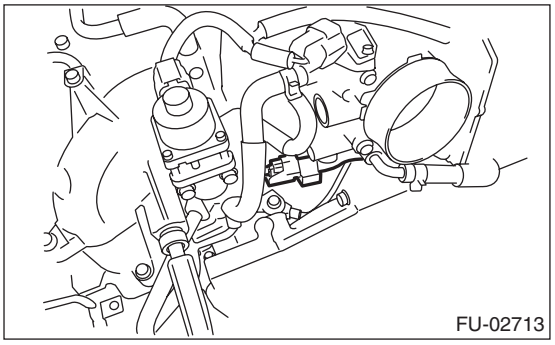

14) Disconnect the connector from crankshaft position sensor.

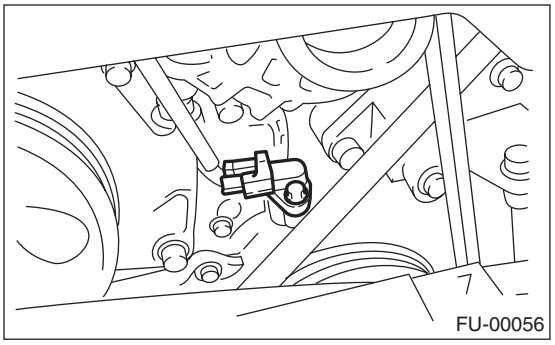

15) Disconnect the connector from the oil pressure switch (A).

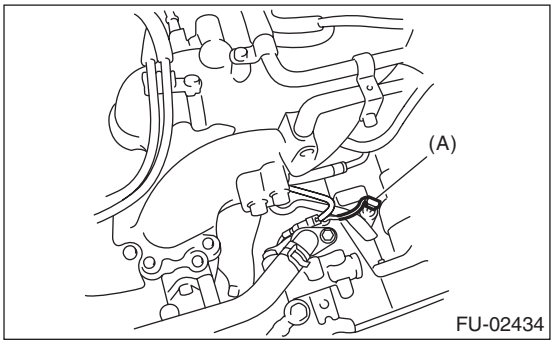

16) Disconnect the connector from the camshaft position sensor.

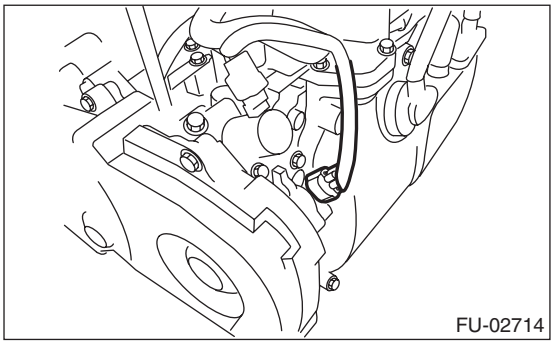

17) Remove the EGR pipe from intake manifold.

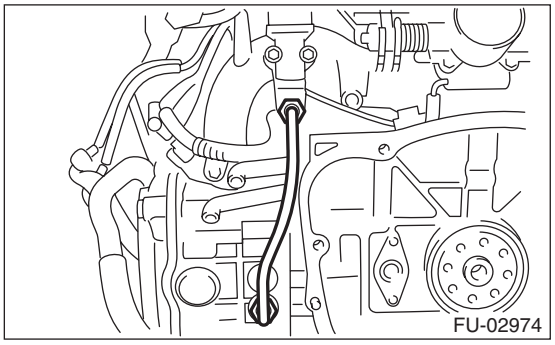

18) Disconnect the fuel hoses from fuel pipe.
(1) Disconnect the quick connector on the fuel delivery line and return line by pushing the ST in the direction of the arrow.

ST 42099AE000 CONNECTOR REMOVER

(2) Remove the clip and disconnect the evaporation hose from the pipe.

CAUTION:
- **Be careful not to spill fuel.**
- **Catch the fuel from hoses using a container or cloth.**

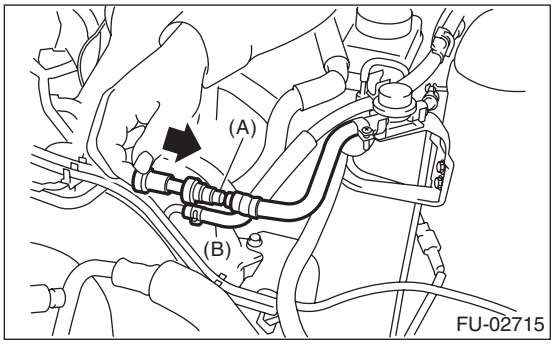

(A) Fuel delivery hose
(B) Evaporation hose

19) Remove the bolts which secure intake manifold to cylinder head.

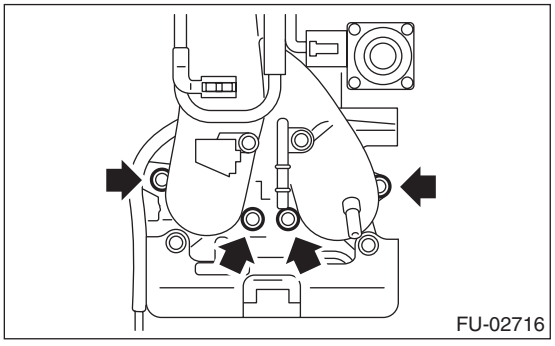

20) Remove the intake manifold.

B: INSTALLATION

1) Install the intake manifold onto cylinder heads.

NOTE:
Use a new gasket.

Tightening torque:
25 N·m (2.5 kgf-m, 18.1 ft-lb)

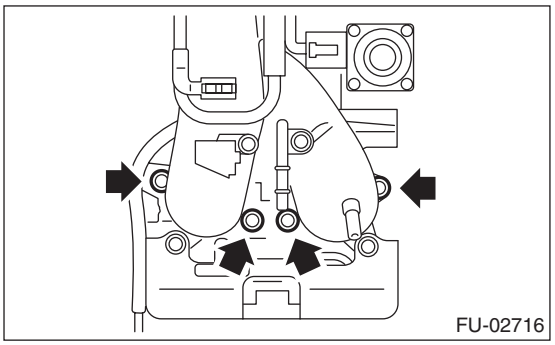

2) Connect the fuel hose and evaporation hose to the fuel pipe.

NOTE:
If the hose is damaged, replace with a new part.

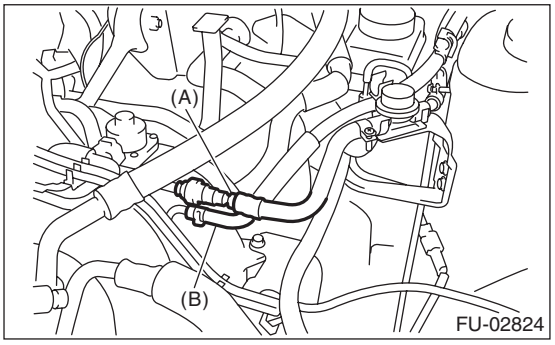

(A) Fuel delivery hose
(B) Evaporation hose

3) Install the EGR pipe to intake manifold.

Tightening torque:
34 N·m (3.4 kgf-m, 24.6 ft-lb)

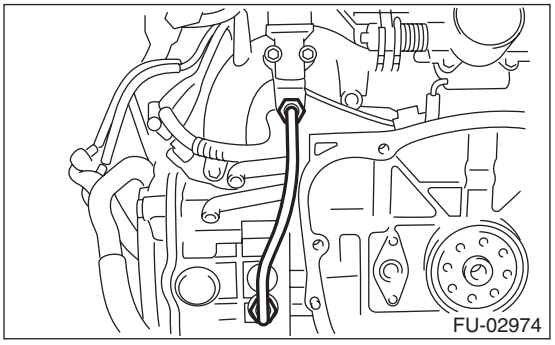

4) Connect the connectors to camshaft position sensor.

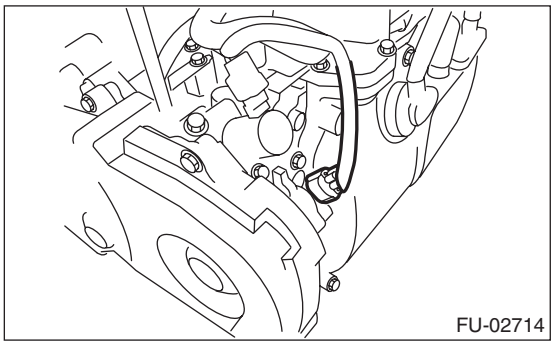

5) Connect the connector to oil pressure switch (A).

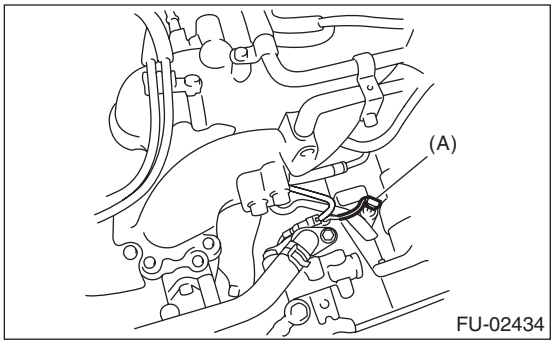

6) Connect the connector to crankshaft position sensor.

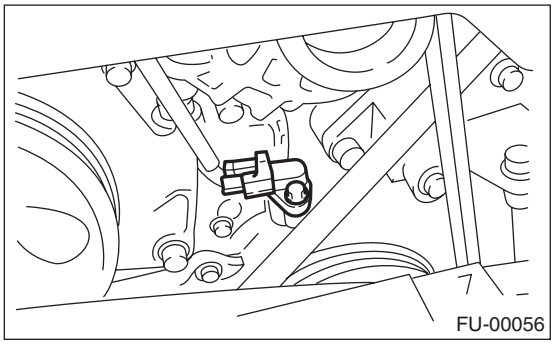

7) Connect the knock sensor connector.

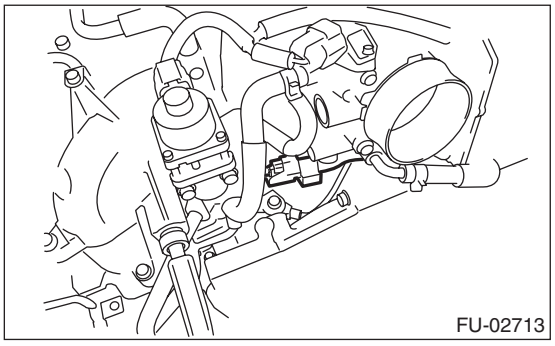

8) Connect the connector to engine coolant temperature sensor.

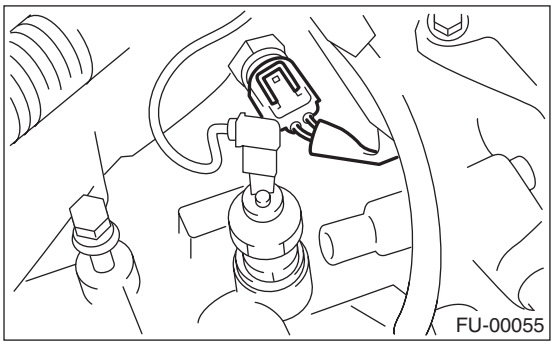

9) Connect the PCV hose (A) to intake manifold.
10) Connect the engine harness connectors (B) to bulkhead harness connectors.

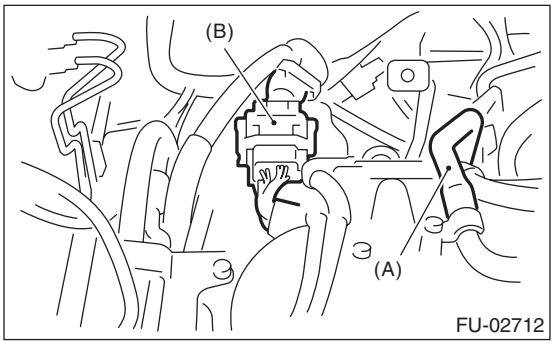

11) Connect the brake booster hose (A).

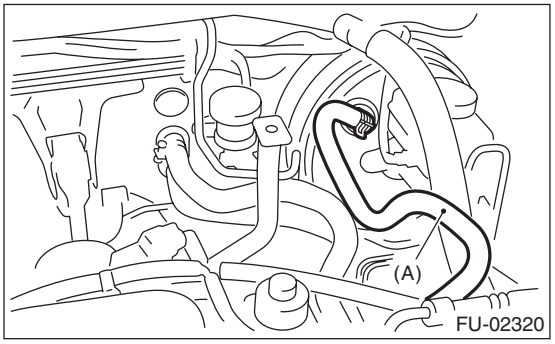

12) Connect the engine coolant hoses (A) to throttle body.

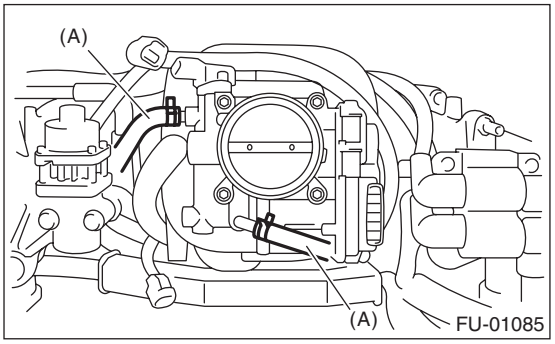

13) Connect the spark plug cords to spark plugs.
14) Install the power steering pump and power steering reservoir tank to the bracket.

(1) Install the power steering reservoir tank to the bracket.

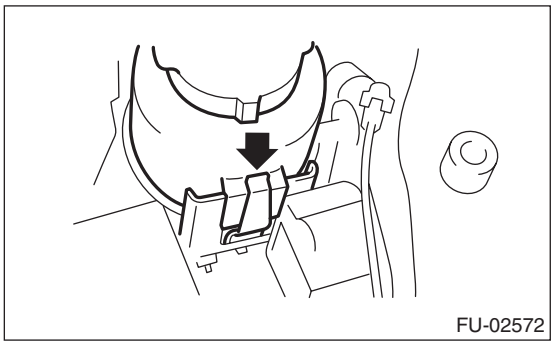

(2) Connect the connector (A) to the power steering pump switch.

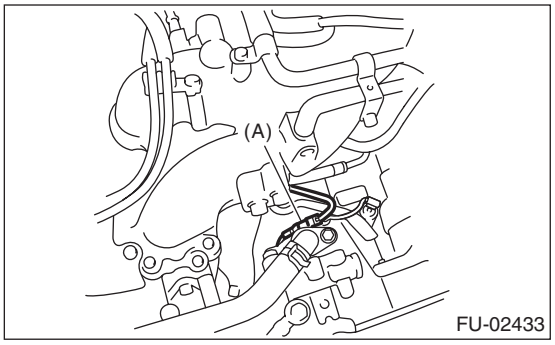

(3) Attach the mounting bolts of the power steering pump bracket.

Tightening torque:
22 N·m (2.2 kgf-m, 15.9 ft-lb)

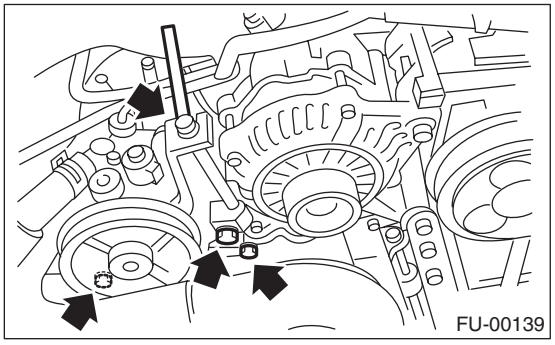

(4) Install the power steering pipes onto the fuel pipe protector RH.

Tightening torque:
13 N·m (1.3 kgf-m, 9.4 ft-lb)

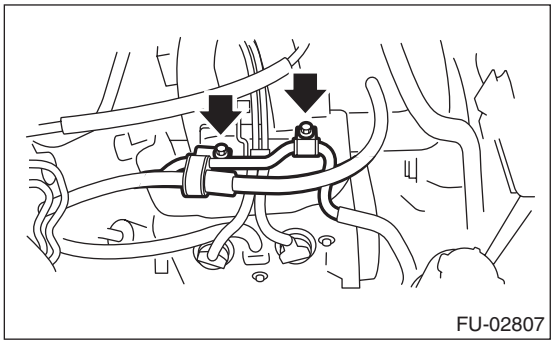

15) Install the generator. <Ref. to SC(H4SO)-14, INSTALLATION, Generator.>
16) Install the air intake duct, air cleaner case and air intake chamber. <Ref. to IN(H4SO)-7, INSTALLATION, Air Intake Duct.> <Ref. to IN(H4SO)-5, INSTALLATION, Air Cleaner Case.> <Ref. to IN(H4SO)-6, INSTALLATION, Air Intake Chamber.>
17) Connect the connector to the fuel pump relay.
18) Connect the ground cable to the battery.

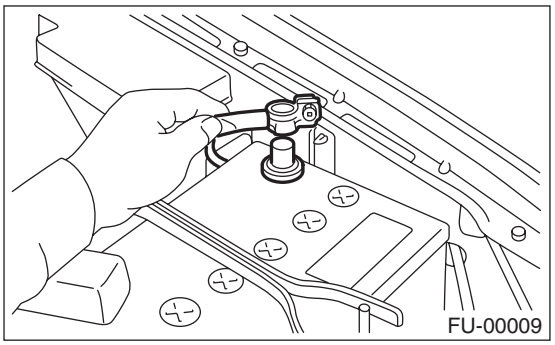

C: DISASSEMBLY

1) Disconnect the engine ground terminal from the intake manifold.

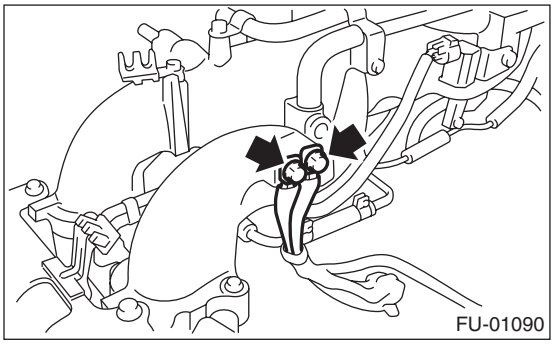

2) Remove the ignition coil and ignitor assembly. <Ref. to IG(H4SO)-6, REMOVAL, Ignition Coil and Ignitor Assembly.>
3) Remove the throttle body. <Ref. to FU(H4SO)-12, REMOVAL, Throttle Body.>
4) Remove the EGR valve. <Ref. to FU(H4SO)-29, REMOVAL, EGR Valve.>
5) Remove the PCV pipe.

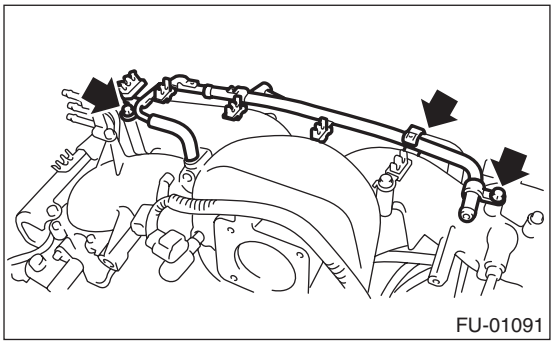

6) Remove the fuel pipe protector LH.

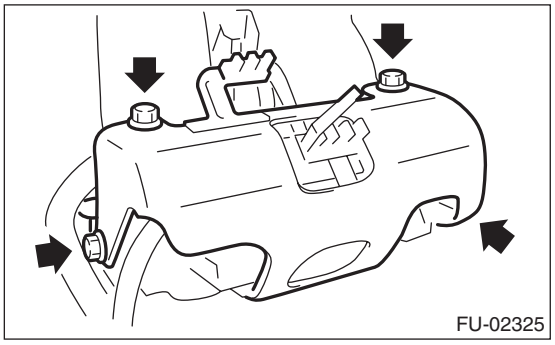

7) Remove the fuel pipe protector RH.

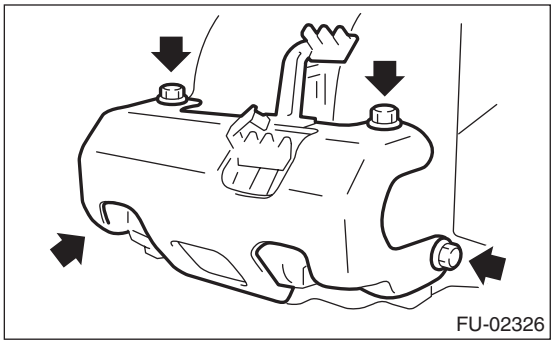

8) Disconnect the connectors (A) from fuel injector.
9) Remove the harness band (B) which holds the engine harness to the fuel injector pipe.

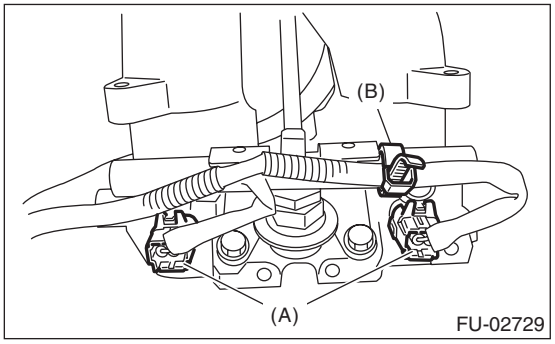

10) Remove the purge control solenoid valve. <Ref. to EC(H4SO)-7, REMOVAL, Purge Control Solenoid Valve.>
11) Remove the harness band clips which install the engine harness.

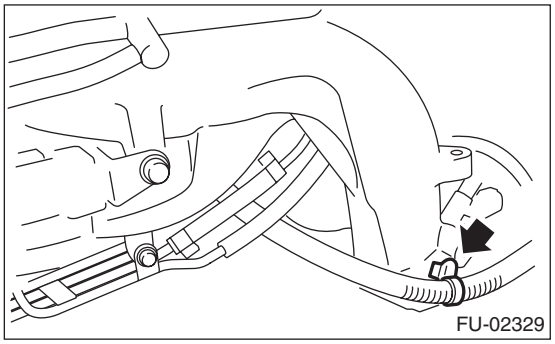

12) Remove the bolts which hold engine harness to the intake manifold.

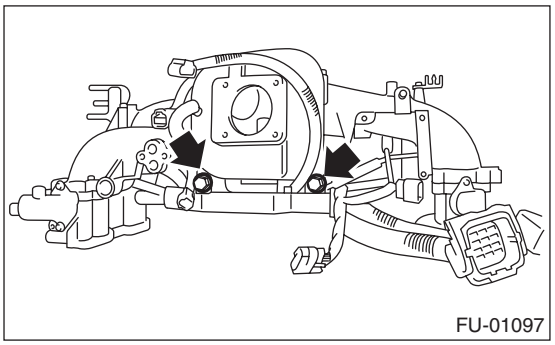

13) Remove the engine harness from the intake manifold.
14) Remove the bolts which hold the fuel injector pipe to the intake manifold, as shown in the figure.

- RH side

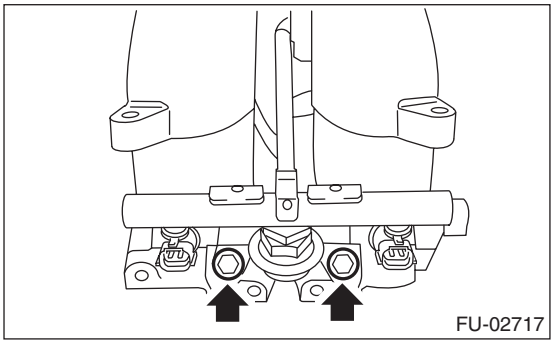

- LH side

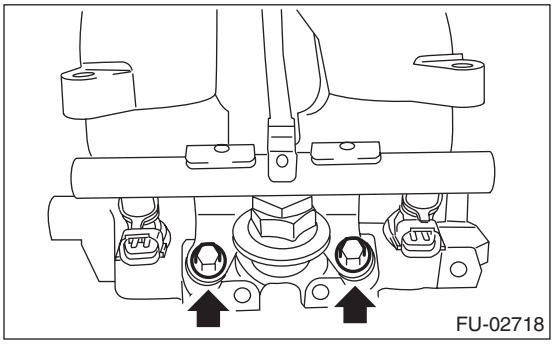

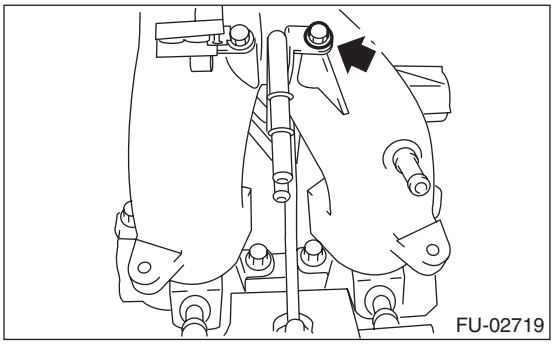

15) Remove the fuel injector from fuel injector pipe.

16) Disconnect the quick connector that fastens the fuel injector pipe RH to the fuel pipe.

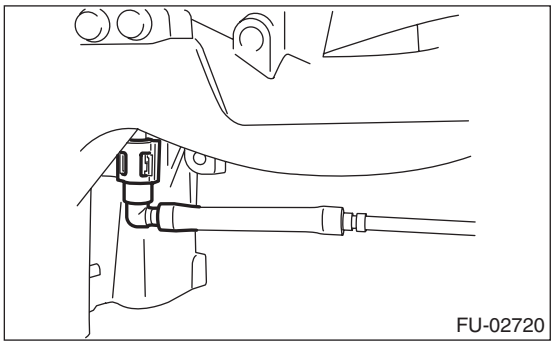

17) Disconnect the quick connector that fastens the fuel injector pipe LH to the fuel pipe.

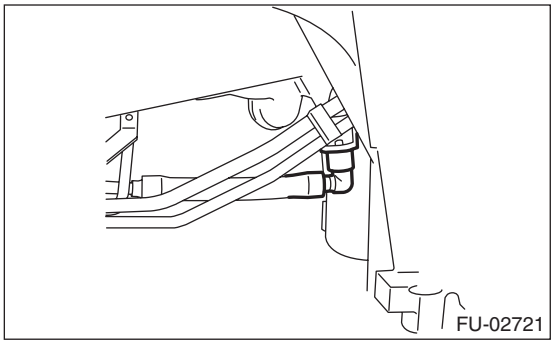

18) Remove the fuel injector pipe RH and LH.
19) Remove the bolts which install fuel pipe assembly on intake manifold.

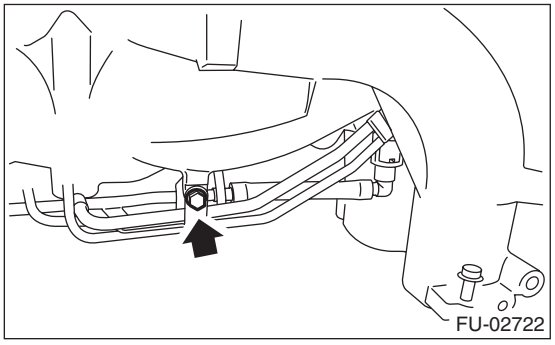

20) Remove the fuel pipe assembly from intake manifold.

D: ASSEMBLY

NOTE:
When assembling the nipple, apply liquid gasket.

Liquid gasket:
THREE BOND 1105 (Part No. 004403010)

1) Tighten the bolts which install fuel pipe assembly on intake manifold.

Tightening torque:
6.4 N·m (0.65 kgf-m, 4.7 ft-lb)

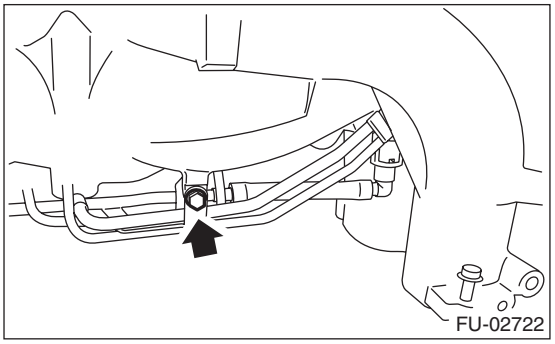

2) Connect the fuel injector pipe LH to the fuel pipe.

NOTE:
Connect the quick connector securely.

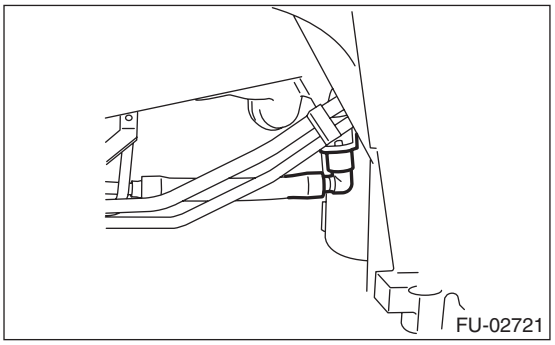

3) Connect the fuel injector pipe RH to the fuel pipe.

NOTE:
Connect the quick connector securely.

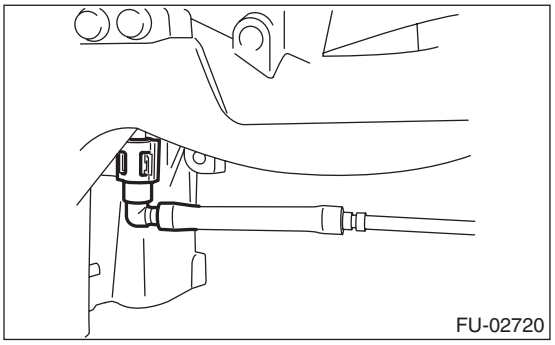

4) Install the fuel injector.

5) Tighten the bolts which install fuel injector pipes on intake manifold.

- RH side

Tightening torque:
19 N·m (1.9 kgf-m, 13.7 ft-lb)

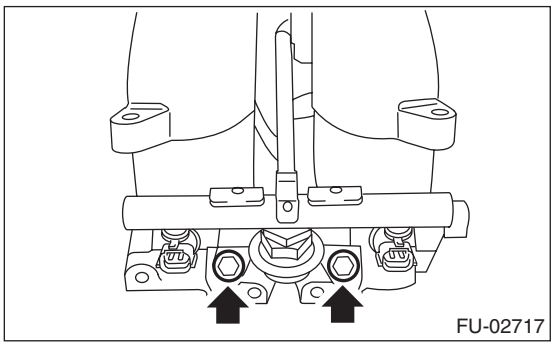

- LH side

Tightening torque:
19 N·m (1.9 kgf-m, 13.7 ft-lb)

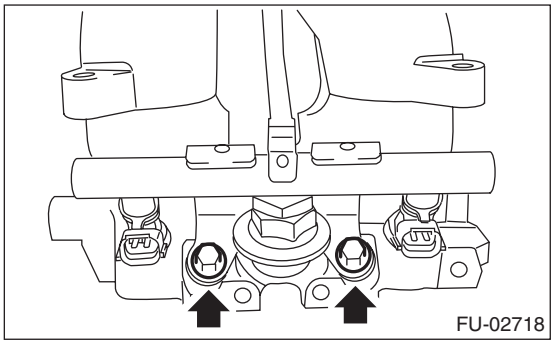

Tightening torque:
6.4 N·m (0.65 kgf-m, 4.7 ft-lb)

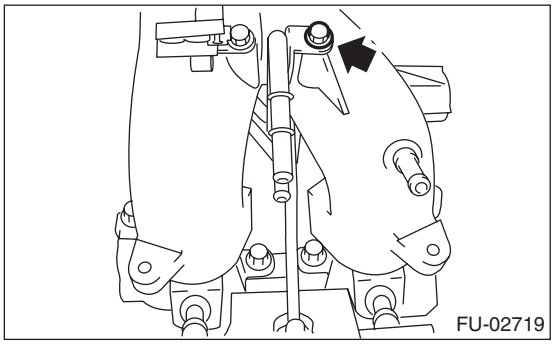

6) Install the engine harness to the intake manifold.
7) Tighten the bolts which install engine harness on intake manifold.

Tightening torque:
19 N·m (1.9 kgf-m, 13.7 ft-lb)

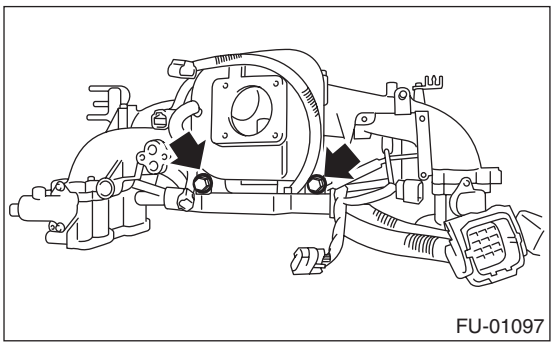

8) Hold the engine harness using the harness band clips.

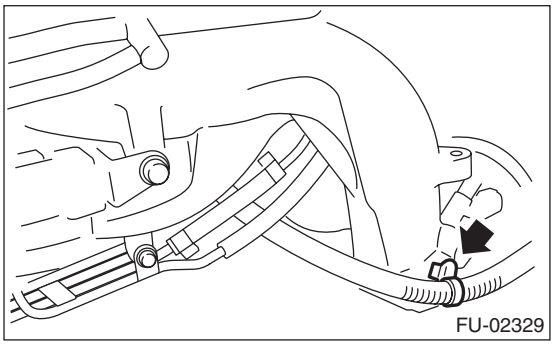

9) Install the purge control solenoid valve. <Ref. to EC(H4SO)-7, INSTALLATION, Purge Control Solenoid Valve.>
10) Connect the connectors (A) to fuel injector.
11) Hold the engine harness to fuel injector pipe by harness band (B).

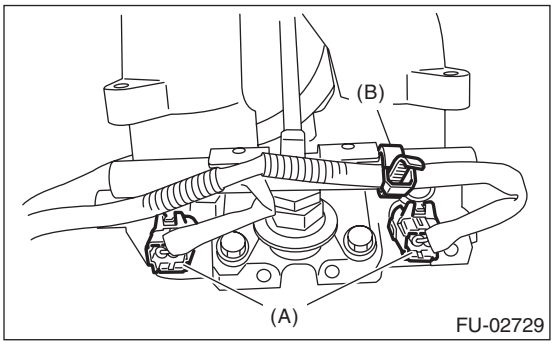

12) Install the fuel pipe protector RH.

Tightening torque:
19 N·m (1.9 kgf-m, 13.7 ft-lb)

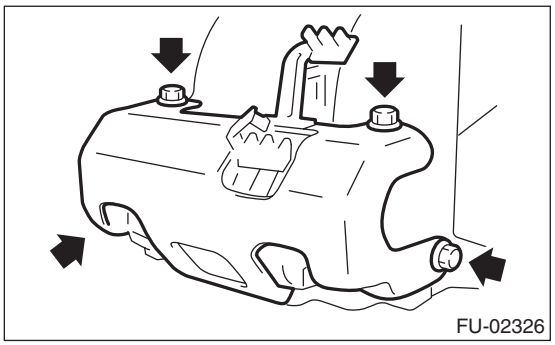

13) Install the fuel pipe protector LH.

Tightening torque:
19 N·m (1.9 kgf-m, 13.7 ft-lb)

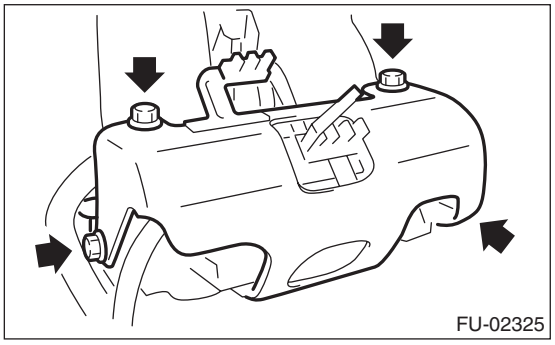

14) Install the PCV pipe.
(1) Connect the hose (A) and (B) to the intake manifold.
(2) Tighten the bolts (C) through (E) in alphabetical sequence.

Tightening torque:
6.4 N·m (0.65 kgf-m, 4.7 ft-lb)

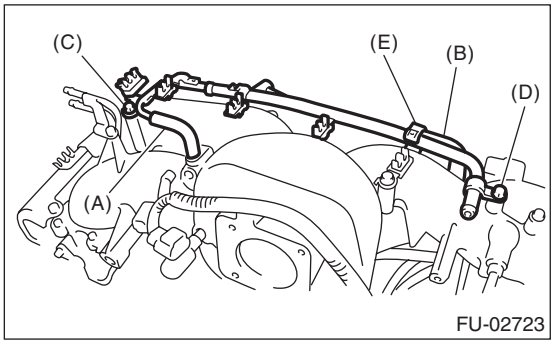

15) Install the EGR valve. <Ref. to FU(H4SO)-29, INSTALLATION, EGR Valve.>
16) Install the throttle body to the intake manifold. <Ref. to FU(H4SO)-12, INSTALLATION, Throttle Body.>
17) Install the ignition coil and ignitor assembly. <Ref. to IG(H4SO)-6, INSTALLATION, Ignition Coil and Ignitor Assembly.>
18) Install the engine ground terminal to intake manifold.

Tightening torque:
19 N·m (1.9 kgf-m, 13.7 ft-lb)

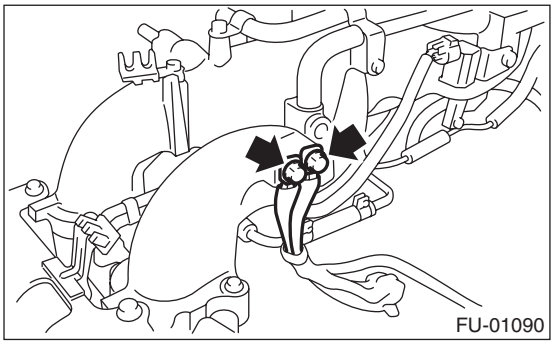

E: INSPECTION

Make sure the fuel pipe and fuel hoses are not damaged and the connections are tightened firmly.